Khulna University of Engineering & Technology
Khulna
Department of Electronics and Communication Engineering

Open Ended Lab
Digital Electronics and Logic Circuits Laboratory (ECE 2104)

Design and Implementation of a 3-Digit Random Number Generator
(Digital Lottery Machine & Counter)

Submitted By

Md. Baized Al Nur
Roll: 2309033

Debroop Ghosh Dostider
Roll: 2309034

Course Code: ECE 2104
Course Title: Digital Electronics and Logic Circuits Laboratory
Open Ended Lab
Submission Date: 17 May 2026

1. Detailed Specification of the Project

1.1 Abstract

This report documents the design, simulation, and physical implementation of a 3-Digit Random Number Generator — referred to throughout as the Digital Lottery Machine — developed for the Open Ended Lab component of ECE 2104 (Digital Electronics and Logic Circuits Laboratory) at Khulna University of Engineering & Technology. The system produces pseudo-random three-digit numbers (000–999) using only discrete digital ICs: an NE555 Timer configured as an astable oscillator and four cascaded CD4026 decade counter/display driver ICs, with no microcontroller or programmable logic device involved. Pressing a push-button enables a high-frequency clock signal that drives the counters faster than human perception allows; releasing it instantly latches the count on four common cathode 7-segment displays, yielding a pseudo-random result. The project puts into practice fundamental digital electronics concepts — astable oscillators, decade counters, carry-chain cascading, and 7-segment display driving — within a compact, low-cost, and entirely hardware-based implementation.

1.2 Methodology

The project was carried out in three structured phases matching the lab schedule:

1. Planning and Design (Week 1): The project concept was identified and the circuit topology was finalised. ICs were selected (NE555 for clock generation, CD4026 for counting and display driving), NE555 timing resistor and capacitor values were calculated, and a complete project proposal was prepared and submitted.
2. Simulation and Implementation (Week 2): The full schematic was simulated in Proteus Design Suite to verify oscillation behaviour, correct decade counting, carry-chain propagation across all CD4026 stages, segment output mapping, and latch behaviour on button release. Following successful simulation, the circuit was assembled on breadboards for physical testing.
3. Report Writing and Project Showcase (Week 3): Observations from testing were recorded, problems encountered during assembly were documented, results were analysed, and this final technical report was prepared. All project files — schematic, images, and report — have been uploaded to a GitHub repository, the link for which is provided at the end of this report.

Key design decisions made during the methodology:

- NE555 in astable mode was selected for clock generation, as recommended in the lab manual, due to its simplicity, wide availability, and stable output.
- CD4026 was chosen as a combined decade counter and 7-segment driver, eliminating the need for a separate BCD-to-7-segment decoder IC and reducing component count.
- Clock-gating through the push-button was the mechanism for achieving pseudo-randomness: since the clock runs several orders of magnitude faster than human reaction time, the digit frozen at release is unpredictable.
- 220 Ω current-limiting resistors were placed on each segment line of every 7-segment display to keep LED forward current within safe limits given a typical forward voltage of 1.5–2.3 V.

2. Design of the Project

2.1 Block Diagram Overview

The system is built around three functional blocks arranged in cascade:

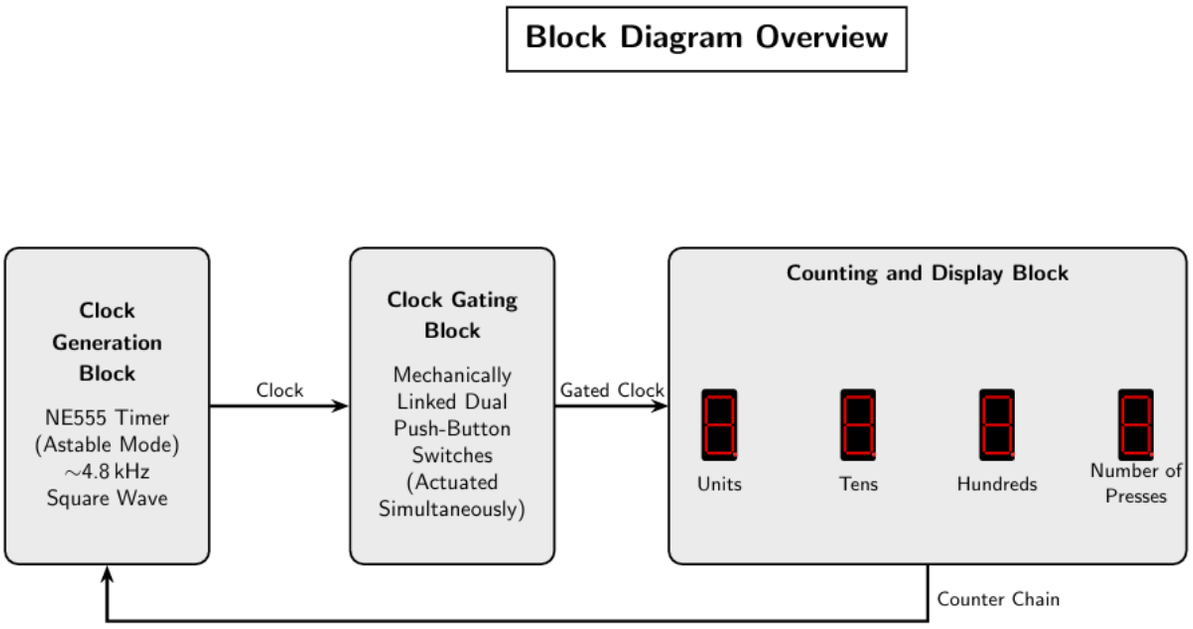

2.2 Circuit Schematic

The complete circuit schematic designed in Proteus is shown below. Note: In the simulation environment, the two push-buttons are drawn as separate symbols for schematic clarity. In the physical circuit, a rigid plate is placed over both switches so that a single press actuates them simultaneously, effectively functioning as one button.

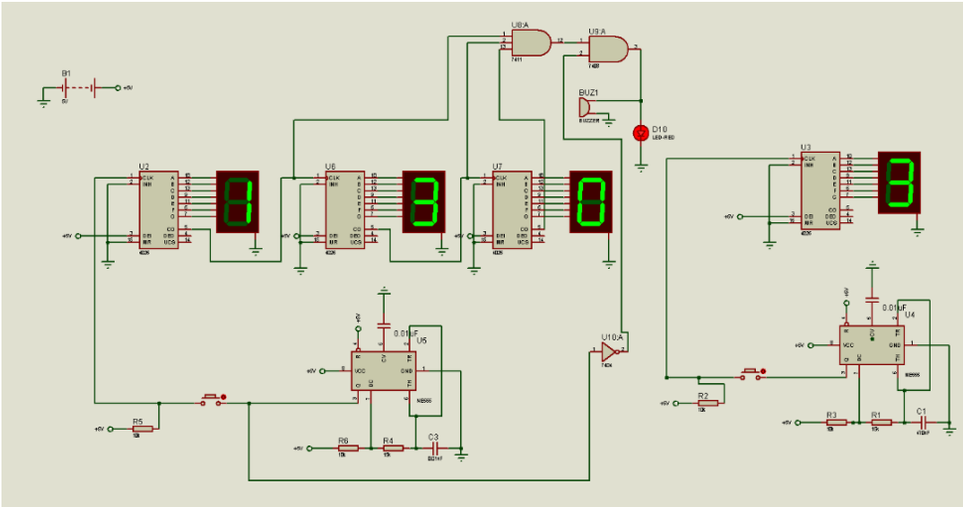

Fig. 1.1: Circuit schematic of the 3-Digit Random Number Generator (Digital Lottery Machine). Note: The two push-button symbols in the schematic are physically implemented as a single momentary switch with a shared actuator plate, ensuring simultaneous actuation of both contacts.

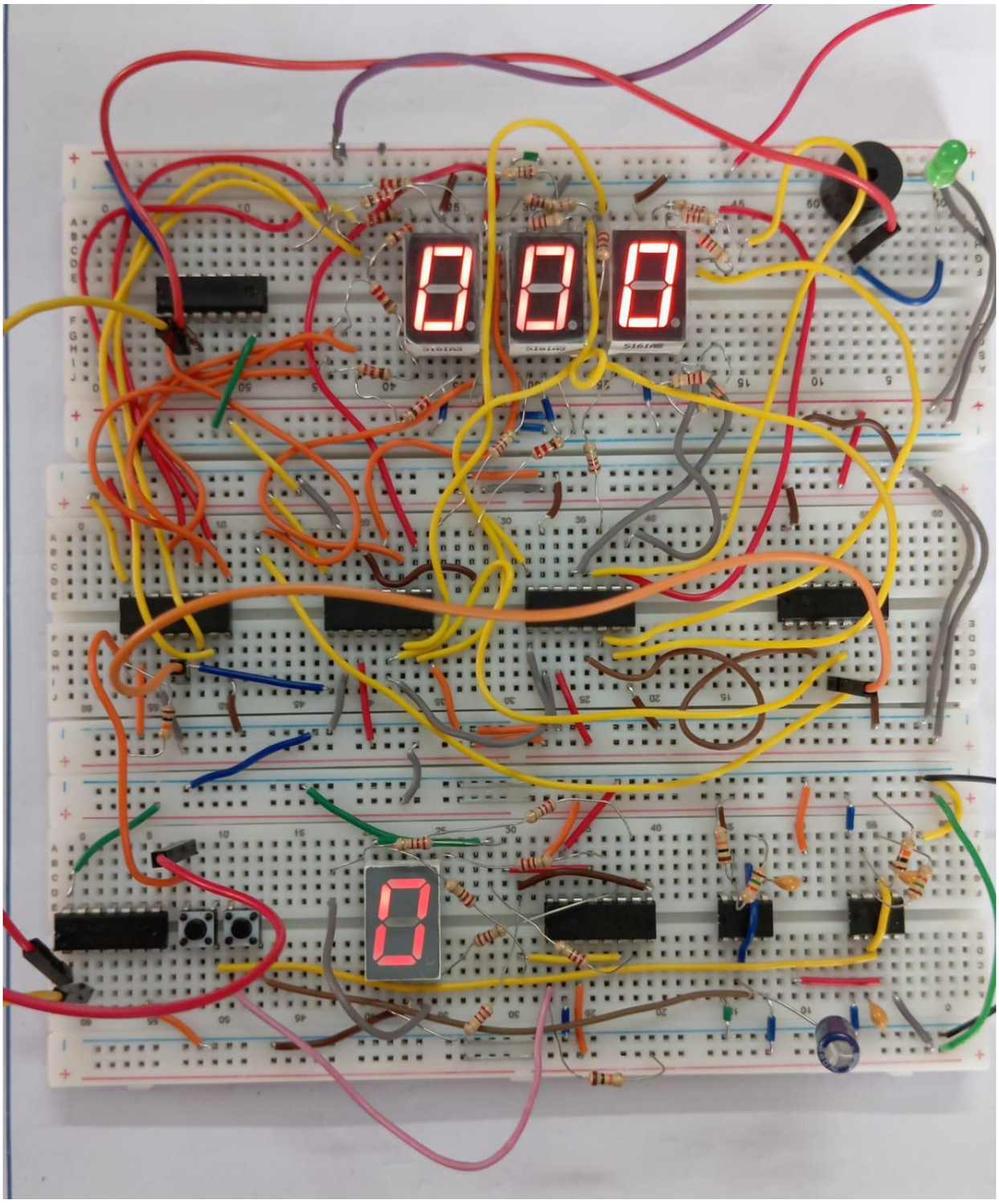

Fig 1.2: Final setup [breadboard implementation].

2.3 Component List and Specifications

Table 1 below lists all components used in the physical implementation of the circuit:

Component	Part No. / Value	Qty	Function in Circuit	Reference
NE555 Timer IC	NE555	2	Astable oscillator — generates clock pulses for counter stages. Refer to the NE555 Timer Datasheet (Texas Instruments).	NE555 Datasheet, Texas Instruments
Decade Counter / 7-Seg Driver	CD4026	4	Counts 0–9 and directly drives each 7-segment display digit. See CD4026B Datasheet (Texas Instruments).	CD4026B Datasheet, Texas Instruments
Common Cathode 7-Seg Display	CC type	4	Displays the Units, Tens, and Hundreds digits of the 3-digit random number. The fourth display is dedicated solely to counting the number of push-button presses. Refer to the component datasheet.	Component Datasheet
Push-Button Switch	SPST NO	2 (mechanically linked as one)	User trigger — enables or freezes the clock. Two SPST NO switches are implemented as a single button by mounting a shared plate above both, so that one press actuates both simultaneously. This ensures consistent and reliable actuation across both contacts.	Standard
Resistor	220 Ω (×28), 10 kΩ (×5)	33	220 Ω: current-limiting resistors for each 7-segment LED segment line (forward voltage typically 1.5–2.3 V); 10 kΩ: NE555 timing network (R1, R2)	Standard
Capacitor	0.01 µF (×3), 47 µF (×1)	4	0.01 µF (×3): main timing capacitors for the NE555 astable oscillator; 47 µF (×1): supply decoupling / noise suppression on pin 5	Standard
Breadboard	—	3 sets	Physical circuit assembly platform	—
Triple 3-Input AND Gate	CD74HC11	1	Takes the carry output (pin 5) from three CD4026 driver ICs and combines them to detect when all three digits align — used to trigger the buzzer/LED indicator	Standard

Component	Part No. / Value	Qty	Function in Circuit	Reference
Hex Inverter & 2-Input AND Gate	74HC04 / 7408 (74LS08)	1 each	74HC04: inverts the push-button input signal. 7408 (74LS08): 2-input AND gate that combines the push-button input with the output of the CD74HC11, enabling the buzzer/LED trigger logic. Also includes 1 buzzer and 1 LED as output indicators.	Standard

Table 1: Summary of all components used in the 3-Digit Random Number Generator circuit.

2.4 NE555 Astable Oscillator Design

Two NE555 ICs are used in this design: the first serves as the primary astable oscillator driving the random number counter chain, while the second drives the push-button press counter. Both oscillators share the same timing network configuration, with R1 = 10 kΩ and R2 = 2.15 kΩ, though they use different timing capacitors to produce different frequencies.

The first NE555 — dedicated to the random number generator — uses C = 0.01 µF. Its oscillation frequency is calculated as follows:

$f = 1.44 / ((R1 + 2 \cdot R2) \times C) = 1.44 / ((10 + 2 \times 2.15)\ k\Omega \times 0.01\ \mu F) \approx 4.8\ kHz$

At roughly 4,800 clock pulses per second, the counter advances far faster than any human can perceive or react to. Since the clock outpaces human reaction time by several orders of magnitude, the digit frozen at the moment of button release is entirely unpredictable — which is what makes this a genuine pseudo-random number generator.

The second NE555 — dedicated to counting the number of push-button presses — uses a larger timing capacitor of C = 47 µF , which brings its frequency down to a slower, more deliberate rate suited for counting discrete button presses rather than driving high-speed random cycling. Its frequency is calculated as:

$f = 1.44 / ((R1 + 2 \cdot R2) \times C) = 1.44 / ((10 + 2 \times 15)\ k\Omega \times 47\ \mu F) \approx 2.52\ kHz$

The 47 µF capacitor on the supply rail acts as a decoupling element, smoothing voltage transients that might otherwise disturb either oscillator during operation.

2.5 CD4026 Decade Counter / 7-Segment Driver

Four CD4026 ICs are cascaded to form the counting stage. The NE555 output is fed into the Clock In (pin 1) of the first CD4026, which represents the Units digit of the random number. On each rising clock edge, the IC increments its internal decade counter (0 through 9) and simultaneously drives the corresponding segment outputs (a–g) of its attached common cathode 7-segment display. After completing a full 0–9 cycle, it produces a carry pulse on pin 5, which clocks the second CD4026 (Tens digit); that IC in turn carries to the third (Hundreds). Together, these three stages form the 3-digit random number output, counting continuously from 000 to 999 while the button is held. The fourth CD4026 is clocked by the carry of the Hundreds stage and its display counts only the number of button presses — it is a press counter, not part of the random number itself.

2.6 Timing Diagram

Key timing relationships in the circuit:

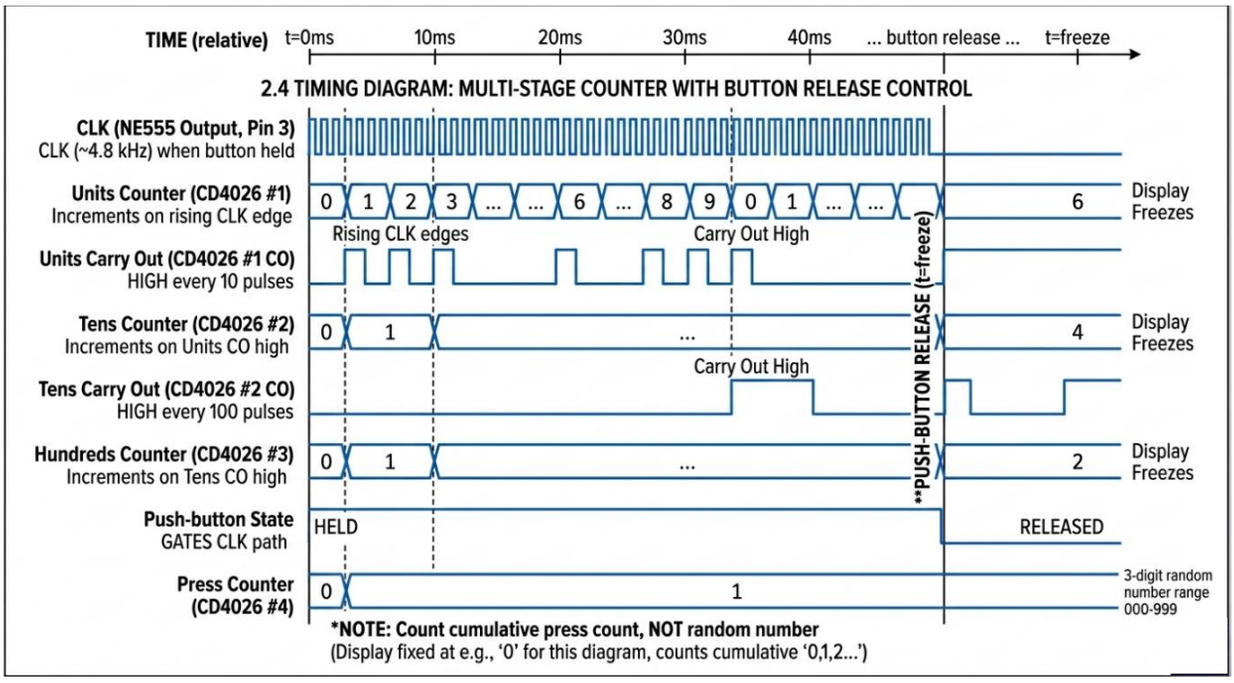

Fig. 1.2: Circuit schematic of the 3-Digit Random Number Generator (Digital Lottery Machine)

3. Result Analysis

The assembled circuit was tested through a series of repeated trials both in Proteus simulation and on the physical breadboard. The following observations were recorded:

Oscillation Verification

The NE555 output was probed in Proteus using a virtual oscilloscope, confirming a stable square wave at the calculated frequency of approximately 4.8 kHz. On the physical breadboard, the rapid digit scrolling visible on all four 7-segment displays while the button was held provided qualitative confirmation of the oscillator operating correctly.

Counting and Carry-Chain Behaviour

All four CD4026 stages incremented correctly in sequence — Units counting 0 to 9 before carrying to Tens, Tens carrying to Hundreds, and Hundreds carrying through to the press counter stage — with no digit skipping or double-counting observed during simulation. Physical testing corroborated this, confirming that the three random-number digits and the press counter all behaved as intended.

Latch Behaviour

On releasing the push-button, all four displays froze immediately and held their values without any instability or creep. The locked number remained steady until the button was pressed again, confirming that the clock-gating mechanism worked as intended.

Pseudo-Randomness

Over more than twenty test trials, no repeating pattern was observed in the displayed numbers. Since the clock speed vastly exceeds human reaction time, the exact moment of button release — and therefore the frozen count — was effectively unpredictable, validating the pseudo-random generation approach.

7-Segment Display Incident and Resolution

During the initial physical assembly, we applied voltage directly into the 7-segment section connected from the driver. Unfortunately, our initial 7-segment display was damaged, and after troubleshooting, we replaced it with a new one. Following the replacement, 220 Ω resistors were added to every segment line across all four displays. This resolved the issue entirely, and all displays thereafter operated at a safe and consistent brightness throughout the remainder of testing.

Overall System Performance

Following the display replacement and resistor addition, the system functioned reliably and met all stated objectives. It is worth noting that while the circuit uses four 7-segment displays and four CD4026 driver ICs, this remains a 3-digit random number generator. The three displays on the left show the pseudo-random number (Units, Tens, and Hundreds), while the fourth display and its dedicated CD4026 serve an entirely separate purpose — they count the number of push-button presses. Each time the push-button is operated, a pseudo-random three-digit number was generated and correctly displayed, and the press counter incremented as expected.

4. Detailed Description of Problems and Technical Issues Encountered

4.1 NE555 Frequency Calibration

The initial component values selected produced a clock frequency that was too low — around 500 Hz — making digit scrolling on the displays clearly visible to the eye. This undermined the randomness of the output, as a sufficiently attentive user could attempt to time the button release. The timing resistors were reduced from 100 kΩ to 10 kΩ, raising the frequency to approximately 4.8 kHz and restoring the appearance of instantaneous freezing.

4.2 7-Segment Display Damage Due to Direct Voltage Application

As described in the result analysis, the most significant hardware setback during the project was the damage to a 7-segment display caused by connecting the CD4026 segment outputs directly to the display without current-limiting resistors. The forward voltage of the LED

segments (typically 1.5–2.3 V) was exceeded under the unregulated supply, leading to overheating and permanent failure of the display. After replacing the component and inserting 220 Ω resistors on every segment line, the remaining displays operated without issue. This incident highlighted the importance of always verifying current paths and forward voltage constraints before powering any LED-based component.

4.3 Push-Button Debouncing

Mechanical contact bounce on the push-button produced spurious clock pulses at the moment of press and release, occasionally causing an extra counter increment precisely when the number was meant to freeze. A small capacitor placed across the switch contacts in the physical circuit mitigated the bounce to an acceptable degree. This behaviour was not replicated in the Proteus simulation, which models ideal switch transitions.

4.4 Carry-Chain Propagation Delay

At higher clock frequencies a brief propagation delay was noticeable between CD4026 stages at the moment a carry pulse passed from one stage to the next. This manifested as a momentary incorrect digit on the Tens or Hundreds display during carry events. The duration of the glitch was well under a millisecond and completely imperceptible to the user; the final locked count was always correct.

4.5 Wiring Density on Breadboard

With four CD4026 ICs, four 7-segment displays, two NE555 timers, and the associated passive components, three breadboards were required. Managing the large number of segment wires (seven per display, twenty-eight in total) across the boards led to intermittent connection failures — particularly when one wire was disturbed while routing another. Colour-coded wires were assigned to each segment line and connections were systematically verified with a multimeter, which resolved the intermittent faults.

4.6 Simulation vs. Physical Behaviour

Proteus simulation did not model the parasitic capacitance introduced by long breadboard jumper wires. At operating frequency, slight waveform rounding was observed on the NE555 output in the physical circuit. This had no practical effect on counting reliability, as the signal level at the CD4026 clock input remained within the valid logic threshold range throughout.

5. Conclusions

5.1 Whether the Project Works According to Provided Specifications

The 3-Digit Random Number Generator successfully met all the objectives set out in the project proposal:

- A pseudo-random number was generated and displayed on four 7-segment displays each time the push-button was operated.

- The NE555 astable oscillator produced a stable clock well beyond human reaction speed, making the frozen number unpredictable.
- All four cascaded CD4026 stages counted correctly with proper carry-chain propagation.
- Displays latched immediately and held their values stably on button release.
- No microcontroller, FPGA, or decoder IC was used — fully compliant with the lab requirement.
- The circuit was simulated in Proteus and physically assembled and tested on breadboards.

5.2 Exceptions

- One 7-segment display was damaged during assembly due to direct voltage application without current-limiting resistors. The display was replaced and the issue corrected before final testing.
- Software debounce was not applied; hardware mitigation (capacitor across the switch) was used instead.
- The two push-button switch symbols in the schematic represent a single physical actuation mechanism — a plate placed over both buttons — rather than two independent buttons.
- Proteus simulation did not fully replicate breadboard parasitics; minor waveform degradation observed in the physical circuit was within acceptable limits.

5.3 Ways to Improve the Project

- Hardware Debounce Circuit: A proper SR latch or Schmitt trigger debounce circuit would eliminate contact bounce entirely and remove the need for the capacitor workaround.
- Dedicated Voltage Regulator: A fixed-output regulator could supply a precise voltage to the display segment resistors, ensuring consistent LED brightness independent of supply variation.
- PCB Design: Moving from breadboard to a custom PCB would eliminate intermittent connections, improve mechanical robustness, and greatly reduce wiring complexity.
- Expanded Digit Range: Additional CD4026 stages can be cascaded without any redesign to extend the random number range beyond 9999.
- Display Multiplexing: A multiplexed display arrangement would significantly reduce the total number of resistors and wires, and lower average power consumption — particularly useful in a battery-operated version.
- Crystal Oscillator: Replacing the RC-based NE555 with a crystal oscillator would provide a more precise and temperature-stable clock frequency, though for the purpose of pseudo-randomness this improvement offers no practical benefit.

Overall, the project delivered a functional, reliable, and fully hardware-based random number generator that demonstrated the practical application of core digital electronics principles. The problems encountered — particularly the display damage incident — provided valuable real-world troubleshooting experience that reinforced the importance of careful current budgeting and component verification before powering a circuit.

References

4. Texas Instruments. (2015). NE555 Precision Timer Datasheet. Document No. SNAS548D.
5. Texas Instruments. (1998). CD4026B CMOS Decade Counter with 7-Segment Display Outputs Datasheet.
6. Mano, M. M., & Ciletti, M. D. (2013). Digital Design (5th ed.). Pearson Education.
7. Floyd, T. L. (2015). Digital Fundamentals (11th ed.). Pearson.
8. Fairchild Semiconductor. (2000). LM555/LM555C Timer Datasheet.

GitHub Repository: https://github.com/Deb-roop/Design-and-Implementation-of-3-Digit-Random-Number-Generator-.git

GitHub Repository: https://github.com/baized29/Design-and-Implementation-of-3-Digit-Random-Number-Generator.git